Manual of CarboLith PL Spot Repair System

Short liner method for the renovation of defective buried sewer pipes in the nominal width range from DN 100 to DN 500

General technical approval, approval number: Z-42.3-383

Minova CarboTech GmbH

Am Technologiepark 1

D-45307 Essen

Phone: +49 (0) 201 809 83 500

Fax: +49 (0) 201 809 83 9 500

E-Mail:
info.de@orica.com
Website: www.orica.com

Table of contents

1 General information

For technical information please contact our customer service:

Address	Minova CarboTech GmbH
	Customer Service
	Am Technologiepark 1
	D-45307 Essen
Phone	+49 (0) 201 809 83 500
Fax	+49 (0) 201 809 83 9500
Email	info.de@orica.com
Website	www.orica.com

In addition, we are always interested in information and experience that results from the application and can be valuable for the improvement of our products.

2 CarboLith PL – Spot Repair System

The short-liner system is a repair method that can quickly eliminate leaks during exfiltration and infiltration, and improve the load-bearing capacity of damaged DN 100 to DN 500 pipelines without time-consuming set-up work.

An auxiliary pipe consisting of a mechanically and chemically resistant composite material made of fibreglass and silicate isocyanate resin is produced at the point of damage and bonded to the old pipe.

The characteristics of the short-liner system and the work instructions presented in this manual meet the following criteria

- of the Güteschutz-Kanalbau (a German quality control association)
- of the RSV Data Sheet 4
- of the DWA Data Sheet M 143-7

The warranty period for the repair carried out is agreed between the Contracting Authority and the Contractor. It is generally 5 years.

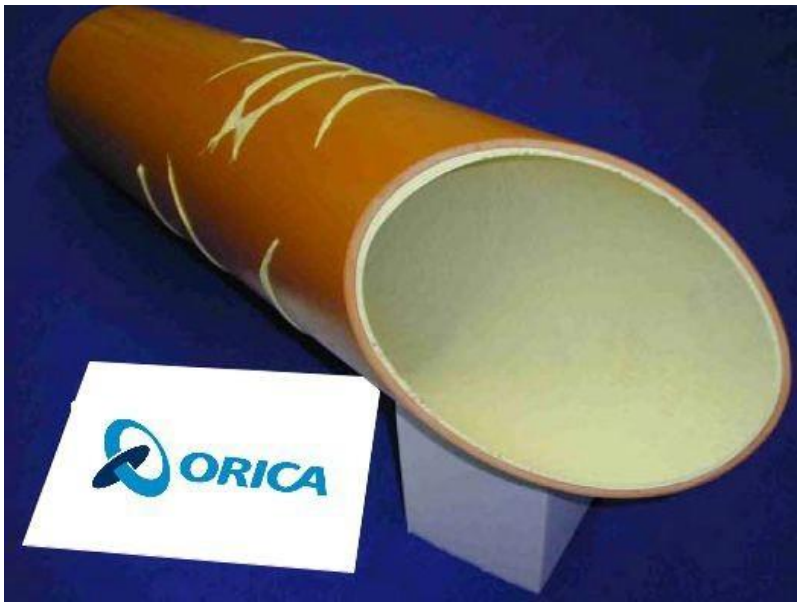

Fig. 1: Pipeline, renovated, CarboLith PL 2K and 3K as acid- and corrosion-resistant fibreglass composite in an old pipe

3 Description of the procedure

The CarboLith PL Spot Repair System is a system for trenchless repair of individual damaged areas in pressureless sewers and pipelines.

The method can be used for the renovation of wastewater pipes made of concrete, reinforced concrete, stoneware, fibre cement, cast iron, GRP and PVC U, provided that the cross-section of the wastewater pipes to be renovated meets the process-related requirements and the static requirements.

The basis for the arrangement of the repair work is the video documentation of the pipe position to be repaired, the type and position of the damage and the length to be covered.

The procedure consists of the following steps: The CarboLith PL silicate isocyanate resin is a mix of components: A (white, water glass component), B (black, isocyanate component) and C (white, catalyst) according to instructions. A fibreglass mat made of E-CR glass, cut according to the damage, is soaked with the liquid resin mixture up to the saturation limit. It is then pulled onto a deep packer which is dimensioned according to the nominal pipe diameter and is pulled or pushed into the damaged areas to be repaired under camera observation. The positioning can be done with push rods, air push rods or a rope winch. At the point of damage, the packer is expanded by means of compressed air and the soaked fibreglass mat is pressed against the old pipe over its entire surface, overlapping.

As a result, CarboLith PL, which now has a highly viscous consistency, penetrates into pipe sockets, cracks and between shards and, after hardening, creates a permanent bond with the old pipe. This way, not only a bond with the surface of the old pipe is obtained, but also a tight fit with the broken structure.

After hardening of the CarboLith PL resin, i.e. usually after approx. 60 minutes, the packer can be relaxed and withdrawn. The removal times depend on different temperatures of the subsoil, as well as on the surface condition or the presence of groundwater. The times are adapted to the requirements by appropriate dosage of component C. The data given are laboratory values.

For reasons of tightness, a minimum layer thickness of 3 mm is required. We recommend 4 mm in a setting of 300, due to better mechanical properties. The CarboLith PL short liner, for example, reduces the free conductor cross-section only marginally. After demoulding, sewage water can be routed back through the CarboLith PL short liner.

The acceptance of the repair takes place by means of channel television, video recording etc. In addition, the repair process is documented, including all relevant information on the materials used. Seven days after installation, the pipeline can be cleaned with high-pressure flushing.

4 Properties of the liner

4.1 The fibreglass material

The fibreglass material gives the liner the necessary tensile strength and high modulus of elasticity as a reinforcing element. The glass itself is made of E-CR glass, a boron-free special fibre that is particularly resistant to acid attack and has good mechanical properties. The special coating on the fibre ensures a particularly good bond between the fibre and the resin.

The mats themselves consist of a total of three layers, two layers of fabric, each offset by 90°, and a layer of random fibres sewn together. The resin-soaked random fibres are used to establish contact between the liner and the pipe or channel interior. Depending on the requirements and agreements with the Contracting Authority, mats of different basis weights can be used in two or three layers. The data sheet prescribes a minimum liner thickness of 3 mm. In the test reports, fibreglass mats with a basis weight of 1387 g/m² were used in two layers. A data sheet can be found in the appendix

- **ECR fibreglass quality**
- fabric on the inside and random fibres on the outside, sewn together

Roll width	approx. 130	cm
Weight	1100 (three-) / 1400 (two-layered)	g/m² ± 4%
Thickness	approx. 1.2 / 1.8	mm
Length of the rolled strip	approx. 40	m

Mat length to be cut: Y

- ***y = pipe diameter x 3.5***
- *thus later overlapping by 10 %*
- *correspond to about 35°*

Fibreglass material

fabric on the inside and random fibres on the outside, sewn together

Roll width	approx: 130 cm
Weight:	1400 g/m2*
Thickness:	approx. 1.8 mm
Length of the rolled strip:	approx. 40 m

Cut off length - pipe diameter x 3.5
thereby later overlapping by 10% (corresponding to approx. 35°)

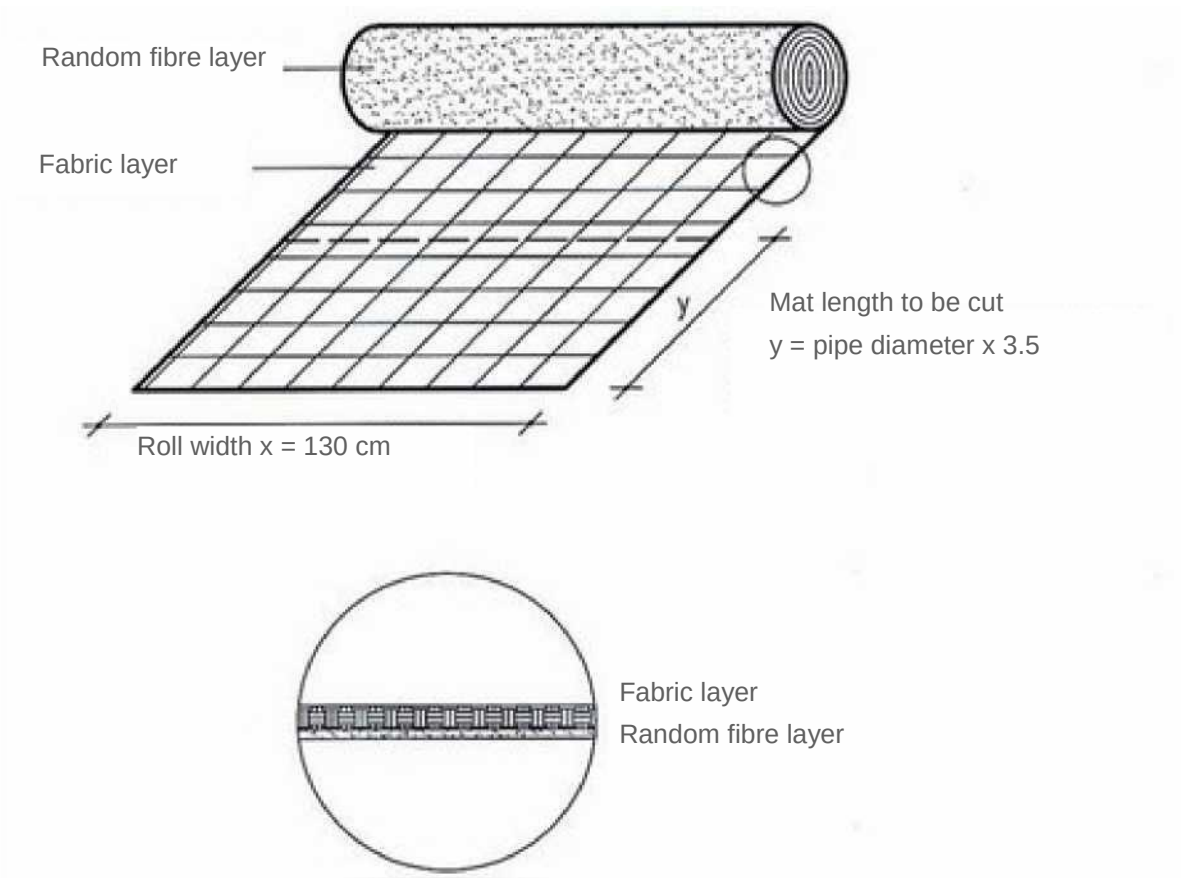

Fig. 2:
Fibreglass material

1 Random fibre layer
2 Woven fabric layers

x Roll width
y Mat length to be cut

4.2 The resin

CarboLith PL short liner resin is a silicate-isocyanate-based resin specially developed for partial repairs of damaged pipelines. It has excellent adhesion, even on damp surfaces, is resistant to aggressive water and does not saponify. CarboLith PL is characterized by its excellent adhesive properties and a very uniform and homogeneous surface when hardened. Pot life and curing time can be adjusted on site by appropriate dosage of component C.

This means that CarboLith PL can be set "very quickly" if the CarboLith PL short liner has to be placed at the beginning of the pipe. CarboLith PL is set to "slower" for larger damage or damage further in the pipeline that requires more processing time. The third component can also be used to react to ambient temperatures. With CarboLith PL, it is possible to work with a stripping time of 1 hour both in winter and summer.

The CarboLith PL 2K short liner resins (Summer, Winter, Fast) are specially adjusted systems which can be used at different temperatures or requirements of the construction site.

The technical data sheets are attached to the manual as appendices.

4.3 Properties of the finished product

The application-relevant characteristic values of the hardened CarboLith PL / CarboLith PL 2K short liners were investigated in the following material tests.

- Material tests:
  - Test of adhesion to the stoneware pipe in accordance with DIN EN ISO 53 769-3 or in accordance with DIN EN ISO 527-4.
  - Test of flexural strength and determination of the flexural modulus of elasticity according to DIN EN ISO 178
  - Water tightness according to DIN EN 1610
  - Test of chemical suitability according to DIN EN ISO 175
  - Test of tensile strength and elongation at break according to EN ISO 527-4
  - Test of ring bending tensile strength, the circumferential modulus of elasticity and the ring stiffness in a short-term test according to DIN EN 1228 (DIN 53 769, Part 3)
  - Determination of ignition loss according to DIN EN 1172
- Drinking water and groundwater hygiene test
- Stress due to high-pressure flushing (Hamburg flushing test)

5 Requirements concerning the CarboLith PL Spot Repair System

The basis for the arrangement of the repair work is the video documentation of the pipe position to be repaired, the type and position of the damage and the length to be covered.

5.1 Applications

The use of the CarboLith PL Spot Repair System is recommended for the following damage patterns:

- Leaks, i.e. exfiltration or infiltration, e.g. at connections (connecting pieces) and transitions between different nominal widths, at pipe couplings and at pipe breaks
- Position deviations, crack and shard formation
- After-treatment of eliminated root ingrowth
- Inlets that are no longer required can be closed permanently

Pipelines made of concrete, reinforced concrete, fibre cement, stoneware, cast iron, GRP and PVC-U are particularly suitable for this type of repair (gravity and pressure pipes).

The CarboLith PL Spot Repair System can be used in the nominal range from DN 100 to DN 500 with a maximum repair length of 3.00 m and a curvature of up to 45°.

A prerequisite for repair using this method is that the old pipe soil system is still load-bearing, even after preparation, e.g. by milling off protrusions. Pipe bends, strong pipe misalignment, pipe breakage with danger of collapse as well as cracks and shards with sewer pipe bedding, no longer provided, generally do not fulfil the requirements for repairs with the CarboLith PL Spot Repair System. Only after a thorough analysis of the damage patterns, it is possible to select the appropriate repair method and thus avoid consequential damage.

5.2 Necessary preliminary work

The nominal diameter of the pipelines must be checked. As part of the preparatory measures, all obstacles, such as projecting objects, solidified deposits and sharp-edged damage must be removed. This is usually done by milling. The retraction or pushing and subsequent inflation of the packers must not be hindered under any circumstances.

Fig. 3: Deep packers

Damaged areas to be repaired must always be cleaned immediately before repair by high-pressure cleaning. Roughening (grinding or milling) or brushing of the pipes is always necessary. The entire sewer pipe, as well as any side inlet, must be kept free of waste water. The damaged area must be cleaned, free of grease and faeces and, if necessary, pre-treated. For this purpose, suitable dewatering systems must be installed and maintained for the duration of the repair work.

5.3 Accident prevention regulations (UVV)

Construction site safety

The construction site is to be secured in the above-ground area according to StVO and GUV before commencement of the works. Manholes and sewer pipes must be checked for dangerous gas concentrations before entering in order to ensure safety of the persons entering. The equipment of the emergency vehicle therefore includes a perfectly functioning gas warning device. It must always be carried along. The maintenance intervals determined by the manufacturer must be observed.

The operating personnel is responsible for wearing the prescribed personal protective equipment and adhering to the safety regulations when handling the materials used. The VDE and UVV, as well as the DWA data sheets and worksheets must be observed.

6 Execution of repairs

6.1 Preparations

Before commencing, it must be checked whether the material specified in the "Construction site equipment material list" is available on the construction site and whether the preliminary work specified under point 5 has been carried out properly.

6.1.1 Deep packers

Corresponding deep packers are prepared for the respective nominal diameter of the sewer pipe. Special packers are available for ovoid pipes. The deep packer must be equipped at both ends with at least two rollers offset by 120° in order to avoid subsequent contact of the soaked liner with the surface of the pipe (exception: DN 100 - 150 with runners). Deep packers, compressors and equipment for pressure monitoring must be checked for proper functioning before use.

6.1.2 Fibreglass mat / Calculation of size

The short liner is dimensioned in such a way, that the damaged area itself is covered by an additional 20 cm in the direction of the pipe axis, on both sides. In the circumferential direction, the ends of the mat must overlap 10% of the circumferential length, at least 10 cm. The rule of thumb is:

DN 100 – DN 500:

- ***Area [m²]*** *= 3.5*
  - *x pipe diameter [m]*
  - *x length of the liner [m]*
  - *x number of layers*

In order to achieve a layer thickness of the CarboLith PL short liner of at least 3 mm, either a fibreglass mat of
- 1,400 g/m² ± 4% in double or a mat of at least
- 1,080 g/m² ± 4% in triple layer must be used.

Other dimensions can be discussed. The mats are cut to fit with fibreglass scissors.

6.1.3 CarboLith PL

6.1.3.1 Components A-B-C

The temperature of the resin components during processing should be between 10°C and 25°C, preferably between 15°C and 25°C. By selective dosing of component C, the CarboLith PL system can be adjusted to the respective requirements regarding temperature in the pipeline, size of the CarboLith PL short liner and required installation time. The recommendations for a standard approach can be found in point 8.2 of the Tables entitled Dosage of component C. For liners that require longer installation time, the amount of component C should be reduced accordingly; for short installation times, a faster setting can be selected.

The amount of resin to be applied should be so large that it is approximately twice the weight of the fibreglass mat to be soaked. Reference values can be found in point 8.3 of the tables entitled Resin quantity requirement (two-layered) and (three-layered). If the substrate is irregular (corroded concrete pipes, large cracks etc.), reasonable additional quantities should be used.

The "CarboLith PL" resin system consists of the resin component A, the hardener component B and the catalyst component C. 100 parts by volume of component A are to be mixed with 200 parts by volume of component B, as well as 1 to 5 parts by volume of component C.

The minimum dosage of catalyst component C in component A is 1%.

Component C must be stirred/shaken before use and stirred into component A in a suitable quantity.

The CarboLith PL 2K resin system is a fixed system with a 1 to 5% addition of component C to component A.

The components must be mixed intensively for approx. 2 minutes in a mixing container using a mixing machine (max. 500 rpm) with stirring basket, so that a bubble-free resin mixture with uniform, streak-free colouring is obtained.

6.1.3.2 Components A-B in PE bottles

The temperature of the resin components during processing should be between 10°C and 25 °C, preferably between 15 °C and 25 °C. CarboLith PL 2K in PE bottles are adjusted systems with 1% (CarboLith PL 2K Summer), 3% (CarboLith PL 2K Winter) and 5% (CarboLith PL 2K Fast) addition of component C in component A. The corresponding processing times can be found in the technical data sheets and should be in accordance to item 8.2. For short liners, which require longer or shorter insertion time, 3 different product variants are available.

The content of the PE bottle should be chosen so that the amount of resin is approximately twice the weight of the used fibreglass mat.
Reference values can be found in point 8.3 (two-layered) and 8.4 (three-layered). If the substrate is irregular (corroded concrete pipes, large cracks etc.), reasonable additional quantities should be used.

Components A and B of CarboLith PL 2Kin PE bottles are supplied separately from each other in 2 bottles. Component A is in a 0.7 l bottle (250 ml or 335 ml), component B in a 1.0 l bottle (500 ml or 665 ml). Component A is completely filled into the bottle of component B. After closing the bottle, both components are intensively mixed by shaking the bottle until a streak-free product is obtained.

6.2 Soaking, folding and application of the fibreglass mat

For soaking and folding, it is necessary to have a flat surface, e.g. a table. In the following, the soaking of a **two-layer short liner** is described:

The specified amount of resin must be used. Particular attention must be paid to the soaking of the edges.

The dimensions for other diameters and lengths, as well as for resin requirements, can be found in section 8.3 (two-layered) and in section 8.4 (three-layered). In the case of uneven substrate at the point of damage (e.g.
corroded concrete pipes), strong cracking or infiltration, a corresponding additional quantity of resin must be provided.

Step A)

Fibreglass mat laid out on a smooth surface (**random fibres on top**)

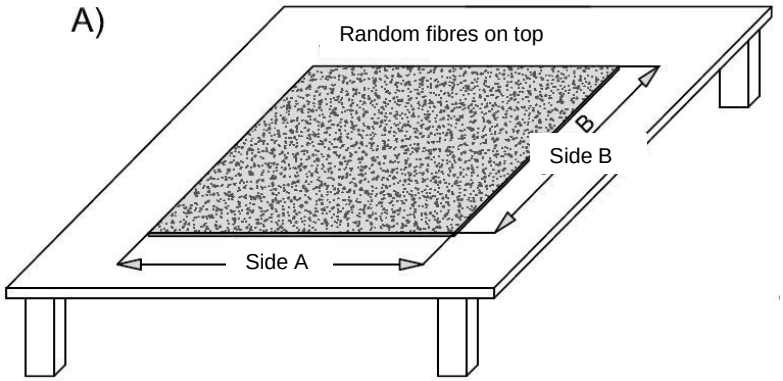

- A construction film is spread out on the table, the surface of which is larger than the fibreglass mat to be soaked. The fibreglass mat with a length of 130 cm (corresponds to the usual roll width) and a width corresponding to 3.5 times the circumference of the pipe is placed on the construction film with the random fibre side facing upwards.

Step B)

Resin application

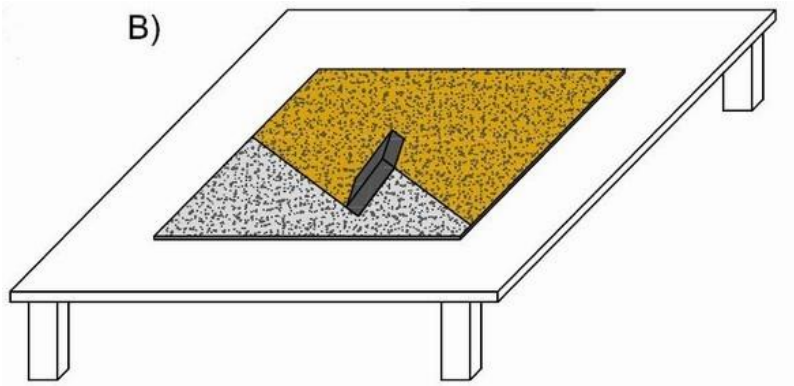

- After mixing the resin, about half of the mixing resin is to be applied by means of grout rubber to be spread out evenly on the fibreglass mat (first layer), on the random fibre side in cross and transverse movements.

Step C)

Turning

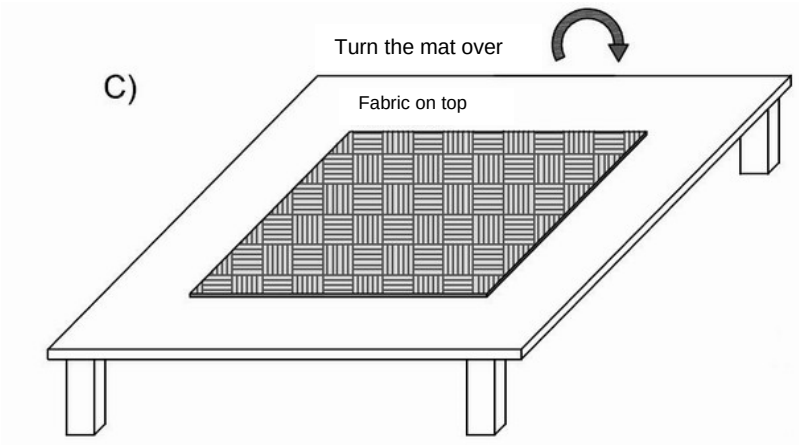

- Turn the fibreglass mat over and evenly soak the fabric side in the fibre direction, until no more resin can be absorbed.

Step D)

Soaking the fabric side

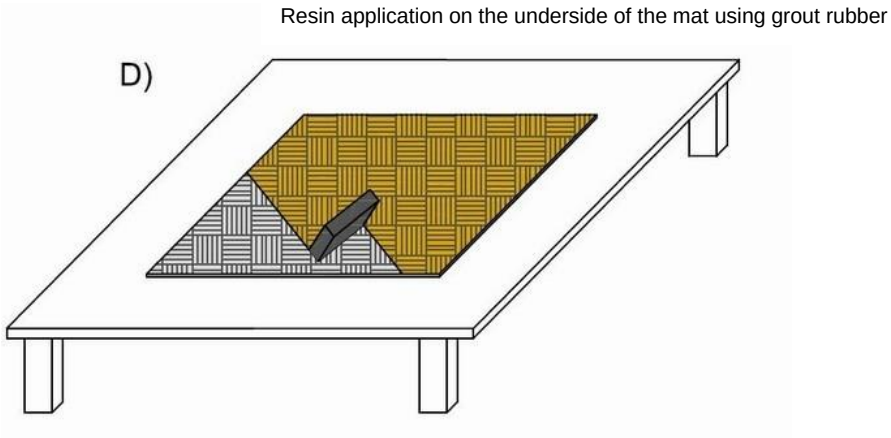

- Using a grout rubber, evenly apply resin on the fabric side, which is now on top, in cross and transverse movements.

Step E)

Fold over one-third

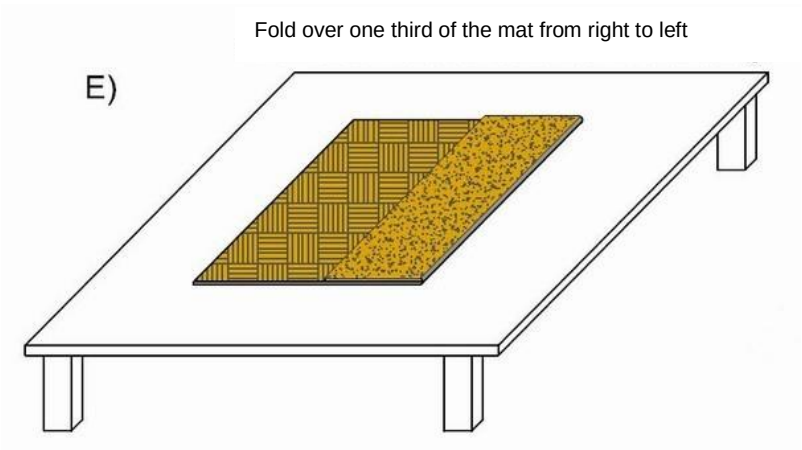

Step F)

Fold over two-thirds

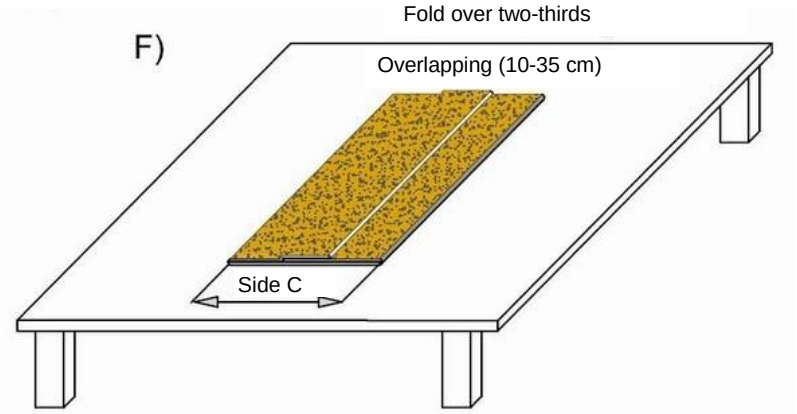

- Below, the two-thirds of the mat is to be turned over, taking into account an overlap of approx. 10 cm.
  Using a spatula, firmly press the top side of the random fibre layer, which is now folded over, onto the underlying layer by means of longitudinal and transverse movements. The layers must be pressed in by longitudinal and transverse movements until the trapped air has escaped.

Step G)

Turn the mat over

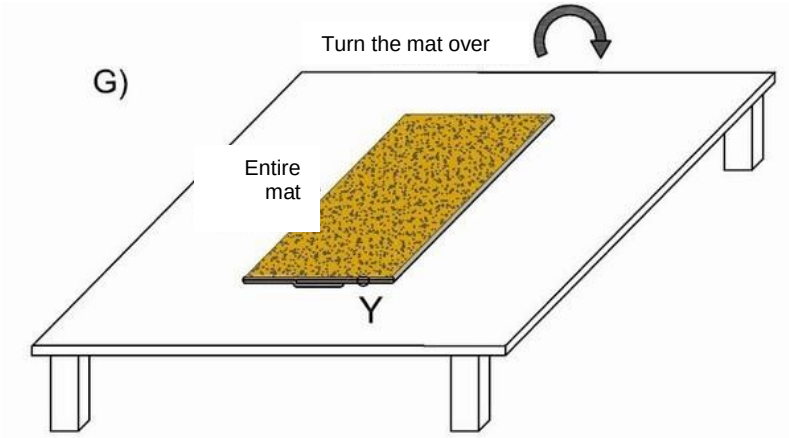

- The folded two-layered fibreglass mat is now to be turned and the random fibre side is to be pressed onto the underlying layer by longitudinal and transverse movements, using a spatula, until the trapped air has escaped.

Schematic cross-section

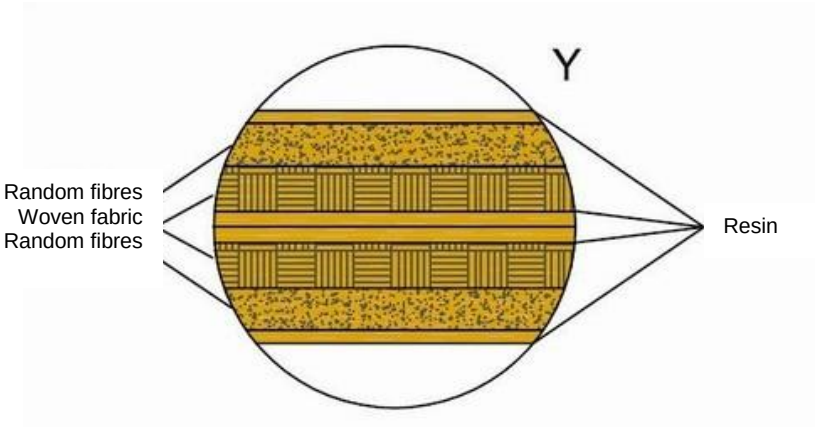

Fig. 10: Resin-bonded fibreglass mat

- Due to the previously described folding to a two-layer short liner, one side of the fibreglass mat forms the side facing the waste water and the other the side facing the old pipe. The glass fabric side of the fibreglass mat lies between the random fibre layers.

3-layered short liners

For a three-layered short liner, a second soaked fibreglass mat (approx. 1/3 of the length of the first fibreglass mat) must be placed in the middle of the first mat before folding, as described above. Subsequently, the same steps shall be applies, as for the production of a two-layered short liner.

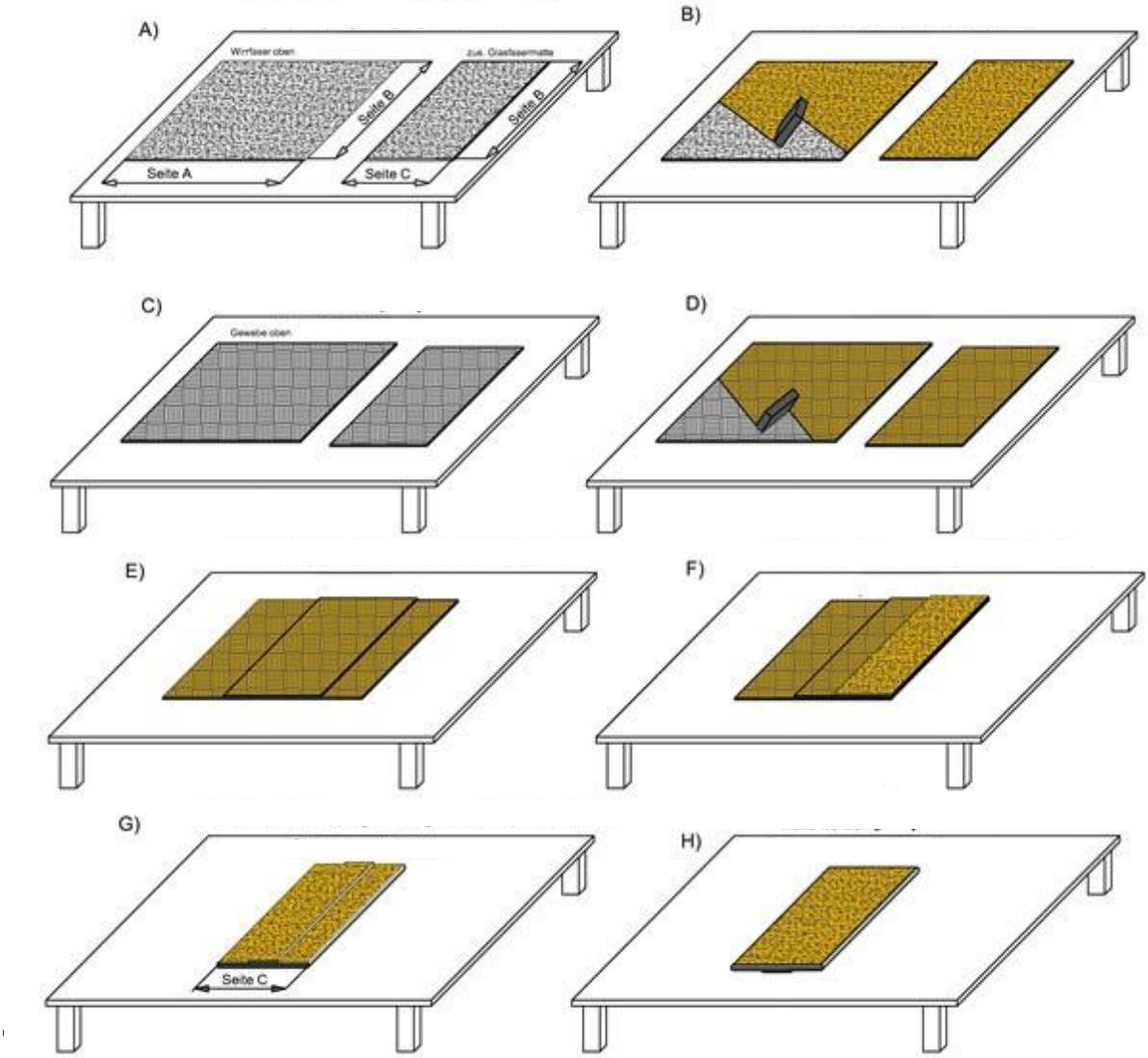

The specified amount of resin must be used. Particular attention must be paid to the soaking of the edges.

The dimensions for other diameters and lengths, as well as for resin requirements, can be found in point 8.3 (two-layered) and point 8.4 (three-layered). In the case of uneven surfaces at the damaged spot (e.g. corroded concrete pipes), severe cracking or infiltration, a corresponding additional quantity of resin must be provided.

Step H)

The deep packer is rubbed or sprayed with a suitable separating agent, e.g. Vaseline. It is then wrapped in a PE protective film with the length of the packer and the width of 3.5 times the pipe diameter.

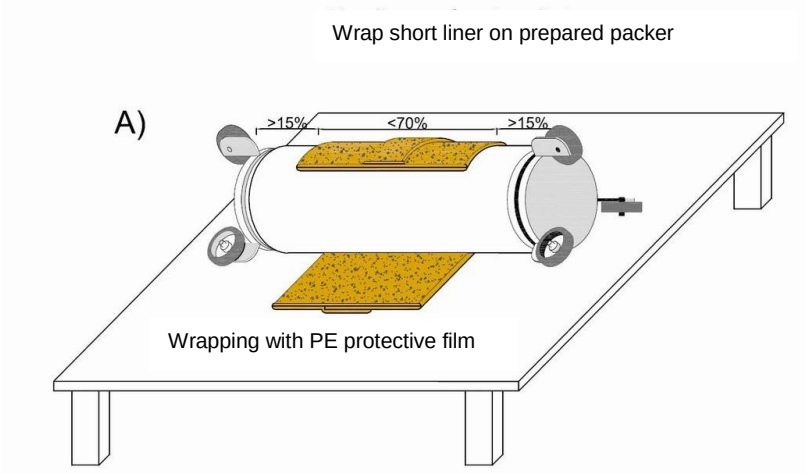

The PE protective film serves as a separating layer for later removal of the packer from the sewage pipe.

When selecting the packer, make sure that the outer diameter of the packer is approx. 50 to 80 mm smaller than the inner diameter of the pipe to be renovated.

The random fibre layer must always be visible on the outside. At the same time, the random fibre layer also points to the packer. This is important for a good connection to the old pipe, as well as for a smooth forming and good resistance to high-pressure flushing.

Step I)

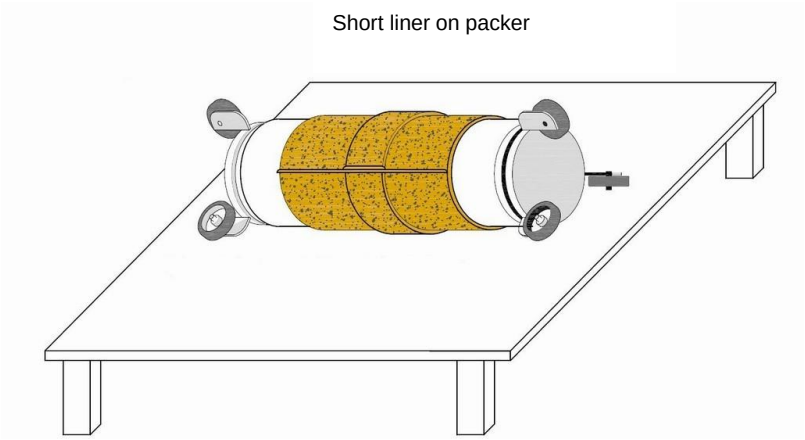

The fibreglass mat, which is saturated with resin, is to be applied to the packer in such a way, that the random fibre side and the overlap are visible.

The fibreglass mat must be secured against slipping and falling.

Step J)

Packer superstructure with resin-coated fibreglass (schematic cross-section)

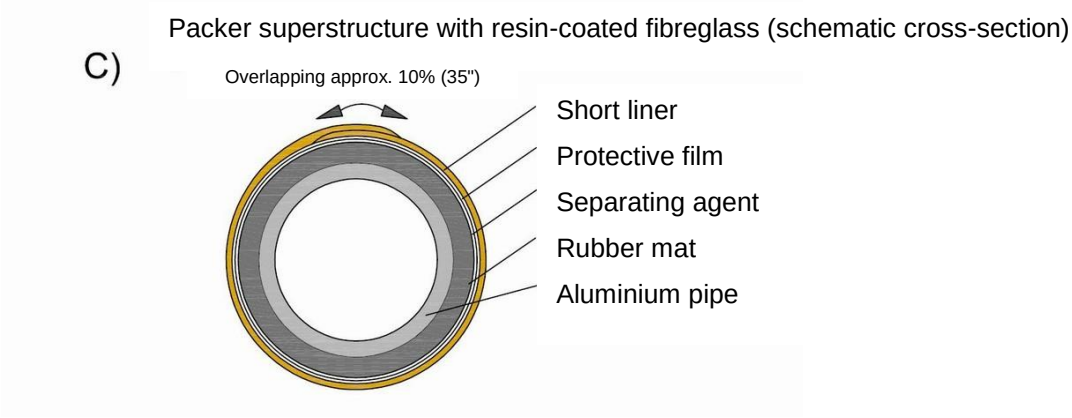

Only packers equipped with rollers may be used for renovation. The rollers must be arranged in such a way, that the resin-saturated fibreglass mat does not touch the inner wall of the pipe when the packer is inserted or moved forward in the sewage pipe to be renovated.

6.3 Positioning the deep packer in the pipeline

Before the packer is drawn into the sewage pipe to be renovated, a compressed air hose from the compressor must be connected to the packer. When inserting, the overlapping end of the fibreglass mat must be aligned in the transom area. During retraction or pushing, make sure that the soaked fibreglass mat does not come into contact with the sewer pipe.

Within the application time, the deep packer is positioned at the damaged area and inflated. The specified application time must be observed, i.e. the packer must not be inflated too early. Depending on the setting selected by CarboLith PL component C, the deep packer remains in this position for 50-90 min at 1.2-2 bar pressure. After complete hardening of the soaked fibreglass material, the inflatable packer is released and pulled out of the channel line by the safety rope carried along.

Maintaining the receiving flow is possible when using transit packers during hardening. If deep packers are used without a passageway, a suitable dewatering system must be installed and maintained.

6.4 Acceptance of the CarboLith PL short liner repair

The acceptance of the installed CarboLith PL short liner is carried out by a channel camera. The driving is carried out with the counter running. The start and end ranges are recorded separately. Finally, a total picture is taken.

As part of the self-monitoring / documentation process, a repair report will be drawn up for each CarboLith PL Short Liner repair in accordance with Section 9.1.

7 Self-monitoring and documentation

7.1 Material

The components of the CarboLith PL Spot Repair System used in the application are subject to the DIN EN ISO 9001 certified quality assurance of Minova CarboTech GmbH (factory production control, WPK) and are externally monitored by the Ingenieurbüro für Kunststofftechnik Siebert in Hamburg. In particular, Minova CarboTech itself monitors compliance with the warranted specifications by their manufacturers and in relation to the resins. Within this framework, the modulus of elasticity and shrinkage are checked for each delivered batch.

The Ü symbol proves that the delivered goods comply with the defined specification.

7.2 Personnel

The persons in charge of the application must be trained according to the certificate of Minova CarboTech GmbH and this training is repeated every year. The training success is confirmed on a training certificate.

7.3 Execution of the renovation

The installation and the materials used must be documented on the repair protocol according to item 9.1. A copy of the repair protocol must be handed over to the Contracting Authority. The original must be kept for the period of the agreed warranty.

It is necessary to store a fibreglass mat sample of > 10 x 10 cm, a sample of the CarboLith PL resin of 100 ml (comp. A and B) or 20 ml (comp. C) each. In addition to the test samples, a liner must be produced every six months above ground in a pipe section on which the modulus of elasticity from bending tension is measured (1h and 24h values), as well as creep tendency, loss on ignition and weight per unit area and the thickness and wall structure of the liner.

8 Application tables

8.1 Construction site equipment material list

The following equipment must be available at the construction site:

Consumable materials

- CarboLith PL components A, B and C in a canister or
- CarboLith PL 2K components A and B in a canister
- CarboLith PL 2K components A and B in bottles
- Fibreglass mat of E-CR quality,
- Protective separating film
- Construction film

Accessories

- Fibreglass scissors
- Measuring tape / metre rule
- Adhesive tape
- Measuring jug
- Disposable syringe of 50 ml for dosing component C
- Mixing container
- Stirring rods / drilling machine or stirrer
- Separating agent / deep packer / compressor
- Grout rubber / rubber wiper
- Air slide rods, winch if necessary
- Safety material (rope etc.)
- Air supply
- Pressure fittings / pressure monitoring
- Camera, monitor

Protective gear

- Protective gloves
- Protective goggles
- Protective suit
- Skin protection cream

Documents

- Material safety data sheets / technical data sheets
- Processing instructions
- Manual

8.2 Table of component C dosing in the CarboLith PL system

Product temperature 10°C

Addition of component C in relation to component A	**5.00 %**	**4.50 %**	**4.00 %**	**3.00 %**
Pot life (spreadability)	8'	9'	10'	12'
Application time	15'	15'	20'	25'
Stripping time	50'	55'	60'	90'

Product temperature 15°C

Addition of component C in relation to component A	**4.00 %**	**3.00 %**	**2.50 %**	**2.00 %**
Pot life (spreadability)	8'	9'	11'	12'
Application time	10'	20'	20'	25'
Stripping time	50'	60'	75'	90'

Product temperature 20°C

Addition of component C in relation to component A	**3.00 %**	**2.50 %**	**2.00 %**
Pot life (spreadability)	8'	9'	10'
Application time	10'	15'	20'
Stripping time	55'	55'	60'

Product temperature 25°C

Addition of component C in relation to component A	**2.00 %**	**1.00 %**
Pot life (spreadability)	8'	10'
Application time	15'	20'
Stripping time	50'	60'

The addition of component C refers to component A in volume percent. In justified cases, it is possible to deviate from the specifications. The minimum dosage of the catalyst component C into component A is 1%.

Component C must be homogeneously stirred into the component A. All times in minutes from the start of mixing with component B. The mixing time of 2 minutes must be observed. The mixture must be free of streaks and homogeneous.

The indicated times are laboratory values with a dispersion of ± 15%. They may change during application due to heat exchange between resin and substrate, surface condition and other factors.

8.3 Table of resin quantity requirement for two-layer arrangement of fibreglass mats

Pipe diameter [mm]	Damage length [m]	Cutting length of fibreglass side A [m]	Cutting width of fibreglass side B [m]	Length of short liner side C [m]	Resin quantity requirement for two-layered mat in volume [litre] 1400 g/m² ± 4%
100	0.2	1.30	0.41	0.6	0.9
100	0.8	2.50	0.41	1.2	1.9
100	1.4	3.70	0.41	1.8	2.8
100	2.0	4.90	0.41	2.4	3.7
100	2.6	6.10	0.41	3.0	4.7
125	0.2	1.30	0.49	0.6	1.1
125	0.8	2.50	0.49	1.2	2.2
125	1.4	3.70	0.49	1.8	3.3
125	2.0	4.90	0.49	2.4	4.4
125	2.6	6.10	0.49	3.0	4.6
150	0.2	1.30	0.57	0.6	1.3
150	0.8	2.50	0.57	1.2	2.6
150	1.4	3.70	0.57	1.8	3.9
150	2.0	4.90	0.57	2.4	5.2
150	2.6	6.10	0.57	3.0	6.4
200	0.2	1.30	0.73	0.6	1.6
200	0.8	2.50	0.73	1.2	3.3
200	1.4	3.70	0.73	1.8	4.9
200	2.0	4.90	0.73	2.4	6.6
200	2.6	6.10	0.73	3.0	8.2
250	0.2	1.30	0.89	0.6	2.0
250	0.8	2.50	0.89	1.2	4.0
250	1.4	3.70	0.89	1.8	6.0
250	2.0	4.90	0.89	2.4	8.0
250	2.6	6.10	0.89	3.0	10.0
300	0.2	1.30	1.05	0.6	2.4
300	0.8	2.50	1.05	1.2	4.7
300	1.4	3.70	1.05	1.8	7.1
300	2.0	4.90	1.05	2.4	9.5
300	2.6	6.10	1.05	3.0	11.8
400	0.2	1.30	1.40	0.6	3.2
400	0.8	2.50	1.40	1.2	6.3
400	1.4	3.70	1.40	1.8	9.5
400	2.0	4.90	1.40	2.4	12.6
400	2.6	6.10	1.40	3.0	15.8
500	0.2	1.30	1.75	0.6	4.0
500	0.8	2.50	1.75	1.2	7.9
500	1.4	3.70	1.75	1.8	11.8
500	2.0	4.90	1.75	2.4	15.8
500	2.6	6.10	1.75	3.0	19.7

8.4 Table of resin quantity requirement for two-layer arrangement of glass fibre mats

Pipe diameter [mm]	Damage length [m]	Cutting length of fibreglass side A [m]	Cutting width of fibreglass side B [m]	Cutting length of middle layer [m]	Cutting width of middle layer [m]	Length of short liner side C [m]	Resin quantity requirement for three-layered mat in volume [Litre]	
							1100 g/m² ± 4%	1400 g/m² ± 4%
100	0.2	1.30	0.41	0.60	0.41	0.6	1.1	1.4
100	0.8	2.50	0.41	1.20	0.41	1.2	2.2	2.8
100	1.4	3.70	0.41	1.80	0.41	1.8	3.3	4.2
100	2.0	4.90	0.41	2.40	0.41	2.4	4.4	5.6
100	2.6	6.10	0.41	3.00	0.41	3.0	5.5	7.0
125	0.2	1.30	0.49	0.60	0.49	0.6	1.3	1.7
125	0.8	2.50	0.49	1.20	0.49	1.2	2.6	3.3
125	1.4	3.70	0.49	1.80	0.49	1.8	3.9	5.0
125	2.0	4.90	0.49	2.40	0.49	2.4	5.3	6.7
125	2.6	6.10	0.49	3.00	0.49	3.0	6.6	8.3
150	0.2	1.30	0.57	0.60	0.57	0.6	1.5	1.9
150	0.8	2.50	0.57	1.20	0.57	1.2	3.0	3.9
150	1.4	3.70	0.57	1.80	0.57	1.8	4.6	5.8
150	2.0	4.90	0.57	2.40	0.57	2.4	6.1	7.7
150	2.6	6.10	0.57	3.00	0.57	3.0	7.6	9.7
200	0.2	1.30	0.73	0.60	0.73	0.6	1.9	2.5
200	0.8	2.50	0.73	1.20	0.73	1.2	3.9	4.9
200	1.4	3.70	0.73	1.80	0.73	1.8	5.8	7.4
200	2.0	4.90	0.73	2.40	0.73	2.4	7.8	9.9
200	2.6	6.10	0.73	3.00	0.73	3.0	9.7	12.3
250	0.2	1.30	0.89	0.60	0.89	0.6	2.4	3.0
250	0.8	2.50	0.89	1.20	0.89	1.2	4.7	6.0
250	1.4	3.70	0.89	1.80	0.89	1.8	7.1	9.0
250	2.0	4.90	0.89	2.40	0.89	2.4	9.4	12.0
250	2.6	6.10	0.89	3.00	0.89	3.0	11.8	15.0
300	0.2	1.30	1.05	0.60	1.05	0.6	2.8	3.6
300	0.8	2.50	1.05	1.20	1.05	1.2	5.6	7.1
300	1.4	3.70	1.05	1.80	1.05	1.8	8.4	10.7
300	2.0	4.90	1.05	2.40	1.05	2.4	11.2	14.2
300	2.6	6.10	1.05	3.00	1.05	3.0	14.0	17.8
400	0.2	1.30	1.40	0.60	1.40	0.6	3.7	4.7
400	0.8	2.50	1.40	1.20	1.40	1.2	7.5	9.5
400	1.4	3.70	1.40	1.80	1.40	1.8	11.2	14.2
400	2.0	4.90	1.40	2.40	1.40	2.4	14.9	19.0
400	2.6	6.10	1.40	3.00	1.40	3.0	18.7	23.7
500	0.2	1.30	1.75	0.60	1.75	0.6	4.7	5.9
500	0.8	2.50	1.75	1.20	1.75	1.2	9.3	11.8
500	1.4	3.70	1.75	1.80	1.75	1.8	14.0	17.8
500	2.0	4.90	1.75	2.40	1.75	2.4	18.7	23.7
500	2.6	6.10	1.75	3.00	1.75	3.0	23.3	29.6

9.1 User training requirements

Operators: Knowledge and training

The vehicle crew, operators, consists of at least two employees, who may be deployed health-wise for

- **"work in the public sewer network."**

The following knowledge of the personnel employed is recommended or presupposed:

- DACH sewer inspection basic course for inspectors DWA-M 149/2 (Ki course)
- DWA-tested sewer cleaner
- At least FS Class 3 (New CE)
- Knowledge of road traffic regulations for construction sites and traffic safety
- Knowledge of accident prevention regulations
- First aid training

Evidence of the aforementioned trained knowledge shall be provided on request. It must also be ensured that knowledge is regularly refreshed (every five years) and that new experience is acquired and taken into account when the staff changes.

The operators must be trained by the supplier of the CarboLith PL Spot Repair System in the technical and safety handling of the materials. The training should be divided into theory and practice. The successful participation in the training is to be confirmed by a certificate of the supplier. The executing companies are required to carry out follow-up training and regular checks of knowledge.

- CarboLith PL Components A, B, C and fibreglass mat material information
- Process application, CarboLith PL mixtures
- Laminating fibreglass mat, folding instructions
- Deep packer and soaked fibreglass mat (fixing) Introducing the CarboLith PL short liner into the pipeline on the deep packer
- Positioning the deep packer and CarboLith PL Short liner

In addition, reaction times, temperature curves, cleaning and equipment maintenance, as well as documentation methods are discussed.

Repair protocol of the construction measure_____

Page …… of ……..

Contracting Authority	**Contractor**
Place	Place
Street	Street
Contact person	Contact person
Phone	Phone

Construction project manager	
Place	Street
from shaft	to shaft
Position	Pipe material
Sewer pipe nominal diameter	Position/Repair layer
Video cassette	Photos

Weather

Weather description _____

Dry weather: ☐ yes ☐ no

Rain: ☐ yes ☐ no

Temperature outside ..... ^{0}C in the canal: ..... °C

Prerequisites

Permission obtained: ☐ yes ☐ no

Water drainage system in place: ☐ yes ☐ no

StVO protection: ☐ yes ☐ no

Repair report prepared: ☐ High pressure cleaning ☐ mechanical ☐ robot

High pressure cleaning – yes on:..... ☐ Milling/grinding

TV inspection/cross section control ☐ yes ☐ no

Material used

CarboLith PL - A: Batch No. _____ Reserve samples ☐ yes

CarboLith PL - B: Batch No. _____ Reserve samples ☐ yes

CarboLith PL - C: Batch No. _____ Reserve samples ☐ yes

Fibreglass: Quality/certificate ___ Reserve samples ☐ yes

Short liner: Short liner length _____ m Number of layers ☐ pc.

Material quantities used

CarboLith PL resin consumption: Target Actual (according to appendix DIBt approval) Actual ..... Actual(total volume)

Product temperature: Target 15-25 °C Actual ..... °C

Mixing pump ratio Target: A = 1 B = 2 C =..... % of A (according to appendix DIBt approval)

Mixing pump ratio Actual: A = .„.(Vol) B =.....(Vol) C =..... addition in % of A

Start of mixing .....Time End of the soaking process . time

Mixing time Target: 2 minutes Actual: .....Minutes

Temperature outside „„..°C in the canal: ..... °C

Installation pressure and curing time of the deep packer

Packer inflation: ..... Time Packer relaxation: ..... Time

Processing time: Max ..... Minutes Observance ☐ yes ☐ no

Hardening time Target: 50 - 90 min. Actual: .... Min

Installation pressure of the packer: Target: 1-2 bar Actual: .... bar

Final TV inspection: ☐ yes ☐ no

Date: …….. Signature: …… Operator: ……

Certificate

We confirm that

Mr. Smith

(Smith GmbH)

successfully participated in the product training course

CarboLith PL – Spot Repair System

Contents of the instruction

- CarboLith PL comp. A, B, C and fibreglass mat – Material information
- Process Instructions and CarboLith PL mixtures
- Laminating the fibreglass mat, folding instructions
- Deep packer and fixation of the soaked fibreglass mat
- Inserting the CarboLith PL short liner into the pipeline on the deep packer
- Positioning CarboLith PL short liner on deep packer

……..

Essen, on Training instructor

TECHNICAL DATA SHEET

Data sheet of E-CR fibreglass mats

Description

Fibreglass mat for two-layered liners

Weight per unit area approx.

1400 g/m^2 ± 4%

Thickness approx. 1.8 mm

Width (standard) approx. 1300 mm

Fibreglass mat for three-layered liners

Weight per unit area approx. 1100 g/m^2 ± 4%

Thickness approx. 1.2 mm

Width (standard) approx. 1300 mm

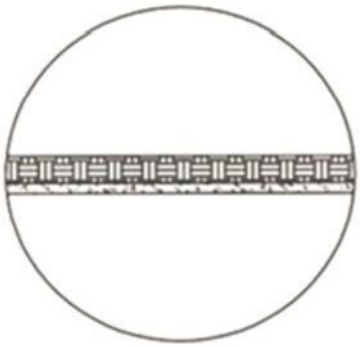

Fabric layer
Random fibre layer

CarboLith PL

Approval Z-42.3-383 (DIBt)

Fields of application

Non-foaming, elasticized, three-component resin, with good adhesion even to moist surfaces, for bonding partial inliners (short liners) during sewer renovation.

CarboLith PL

- soaks E-CR fibreglass mats well,
- also adheres to damp surfaces,
- does not foam, not even in the case of water entry,
- hardens well in thin layers,
- Formwork is easy to demould,
- is resistant to aggressive water, acids and alkalis and does not saponify.

CarboLith PL is delivered in three components. Component C is used to adjust the setting behaviour.

Advantages:

- General building supervisory approval by the German Institute for Building Technology (Deutsches Institut für Bautechnik)
- quickly applied: Cycle time approx. 60 min
- no unpleasant odours
- high firmness
- very good chemical resistance

Data

The indicated processing data are approximate values. They may change during application due to heat exchange between resin and substrate, surface condition and other factors. The pot life depends mainly on the material temperature, the demoulding time on the ambient temperature.

Example dosages and times concerning CarboLith 3K

Initial temperature (°C)	**10**	**15**	**20**
Pot life (spreadability)	approx. 10 min		
Application time	approx. 20 min		
Stripping time	approx. 60 min		
Mixing ratio A: B : C (Vol.-T.)	**100 : 200 : 4.0**	**100 : 200 : 3.0**	**100 : 200 : 2.0**

Detailed table – see point 8.2.

CarboLith PL 2K Summer

Reaction data (typical values):

Mixing ratio A: B	**100 : 200 Vol.-T.**		
Initial temperature	**20 °C**	**25 °C**	**30 °C**
Pot life (spreadability)	**approx. 15 min**	**approx. 12 min**	**approx. 8 min**
Application time	**approx. 25 min**	**approx. 20 min**	**approx. 10 min**
Stripping time	**approx. 90 min**	**approx. 60 min**	**approx. 50 min**

CarboLith PL 2K Winter

Reaction data (typical values):

Mixing ratio A: B		**100 : 200 Vol.-T.**	
Initial temperature	**10 °C**	**15 °C**	**20 °C**
Pot life (spreadability)	**approx. 12 min**	**approx. 10 min**	**approx. 8 min**
Application time	**approx. 25 min**	**approx. 20 min**	**approx. 10 min**
Stripping time	**approx. 90 min**	**approx. 60 min**	**approx. 50 min**

CarboLith PL 2K Fast

Reaction data (typical values):

Mixing ratio A: B		**100 : 200 Vol.-T.**	
Initial temperature	**10 °C**	**15 °C**	**20 °C**
Pot life (spreadability)	**approx. 8 min**	**approx. 6 min**	**approx. 4 min**
Application time	**approx. 15 min**	**approx. 10 min**	**approx. 5 min**
Stripping time	**approx. 50 min**	**approx. 40 min**	**approx. 35 min**

► See "CarboLith PL Spot Repair System Manual" for a detailed table concerning temperature range from 5°C to 25°C.

Substance data

		Component A	Component B	Component C	Standard
Density at 25°C	kg/m3	1490 ± 50	1130 ± 40	1120 ± 40	DIN 12791
Colour	-	colourless	black-brown	light brown	
pH value		12 - 13	N/A	12 - 13	DIN 19 268
Flash point	°C	none	> 200	100	DIN 53213
Viscosity at 25°C	mPa*s	270 ± 140	150 ± 100	40 ± 10	ISO 3219

Mechanical properties of the resin

Density	1270	kg/m3	DIN EN 1183-1
Tensile strength	≥ 11	MPa	DIN EN 527-2
E-module elasticity	≥ 90	MPa	DIN EN 527-2
Compressive strength	≥ 35	MPa	DIN EN 604
E-module pressure	≥ 500	MPa	DIN EN 604
Bending stress at 2% elongation	≥ 9	MPa	DIN EN ISO 178
Shore D hardness	>60	MPa	DIN 535005
Shrinkage	≤ 0.1	%	Based on ISO 2577:2007

Mechanical properties of the liner

				Expert report
Ring stiffness Vertex compression test*	140	kPa	DIN EN 1228	5
E-module Vertex compression test*	≥ 4500	MPa	DIN EN 1228	5
Ring stiffness Peak compression test, short time** (S_0)	2.6	kPa	DIN EN 1228	2
E-module Vertex compression test, short time**	≥ 4500	MPa	DIN EN 1228	2
E-module Vertex compression test, 400 d**	≥ 4500	MPa	DIN EN 1228, DIN EN 761	2
Axial / radial bending strength	≥ 100	MPa	DIN EN ISO 178	2.7
Axial/radial e-module of bending	≥ 4500	MPa	DIN EN ISO 178	7
Tear resistance (glass. stoneware)	≥ 2.0	MPa	DIN EN ISO 24624	2/8

*Internal diameter of the pipe 150 mm, liner thickness 4 mm, ** internal pipe diameter 300 mm, liner thickness 4 mm
The values are taken from the specified expert opinions; they are to be regarded as orientation values.

Composition and properties

Components

CarboLith PL, component A is a special sodium water glass with additives. Component B is a modified polyisocyanate. Component C is a mixture of additives which improves the miscibility of A and B components and is adjusted over the pot life of the mixture. In the 2 K systems, component C is located in the component A.

System
During the reaction, component A hardens to a silicate, while at the same time a solid polyisocyanurate polyurea is formed from component B.

Final product
- The two solids penetrating each other form a tough-elastic, pore-free silicate resin (organomineral resin).
- In combination with ECR fibreglass mats, a properly set short liner already survived several high-pressure rinses with 120 bar at the connecting piece after 3 d without noticeable damage.[6] For safety reasons, please note that you should limit the pressure at the rinsing nozzle to 80 bar (water temperature < 20 °C, not longer than 3 min at one point).
- It is resistant to sulphuric acid and caustic soda solution (24 h storage in 10% sulphuric acid or 5% caustic soda solution) without significant change in strength [2,7], as well as to a large number of organic and inorganic liquids such as petrol, diesel and mineral oils.[9]
- With regard to groundwater hygiene, CarboLith PL meets the KTW requirements for large and small area sealing.[4]
- Even after 200,000 load changes in the Darmstadt tipping trough, the short liner was still watertight.[2]

Processing
Mixing
By selective dosing of component C, the system can be adjusted to the respective requirements with regard to temperature, size of the short liner and required application time.

Component C must be stirred before use and stirred into component A.
This mixture is intensively mixed with component B for two minutes.

Soaking the fibreglass mat
E-CR fibreglass mats are to be used as carrier material for the resin. To achieve the prescribed liner layer thickness of at least 3 mm, either a glass fibre mat of 1400 g/m² ± 4% basis weight in duplicate or an 1100 g/m² ± 4% mat in triple layer shall be used. The random fleece layer must lie on the outer surfaces. A glass fibre mat with a suitable surface is spread out on a PE film. The resin mixture is applied on all sides using a spatula or rubber wiper. A resin volume (l) is required which is 1.9 times the total area (m²) of the fibreglass mat when using the 1400 g/m² ± 4% fibreglass mat or 1.5 times the area when using the 1100 g/m² ± 4% fibreglass mat.

► For a detailed table of the various pipe diameters and damage lengths and the resulting cuttings and resin quantities, please refer to the "CarboLith PL Spot Repair System Manual."

If the surface is uneven (e.g. corroded concrete pipe) or there are severe cracks, a corresponding additional quantity must be provided.

Placing the short liner
The fibreglass mat soaked in this way is wound onto a PE film-wrapped deep packer. The packer is positioned at the point of damage within the application time. The packer is inflated and, depending on the amount of catalyst used, is kept at a pressure of 1 to 2 bar approx. one hour after mixing, then relaxed and withdrawn.

Hardening of the short liner
After stripping the formwork, the discharge can be directed through the liner. Complete hardening is achieved after one week at the latest; the position can then be rinsed with high-pressure nozzles (max. 80 bar at the rinsing head, max. 3 min at one point). During processing, the requirements of the General Building Inspectorate Approval must be observed. For complete processing details, see "CarboLith PL Spot Repair System Manual."

Hazard warnings and safety advice
The usual precautions for handling chemicals must be observed, see the safety data sheet.

Form of delivery

All packaging complies with the legal regulations of the Dangerous Goods Ordinance Road (GGVS).

Component A (white canister)	Component B (black canister)	Component C (silver canister)
7 kg in a tinplate container	5.5 kg in a tinplate container	1 kg in a tinplate container
28 kg in a tinplate container	21 kg in a tinplate container	5 kg in a tinplate container

Other delivery forms on request.

Storage, shelf life

At least six months after delivery or twelve months after production with dry storage between 10°C and 30°C. Frost can damage component A (flocculation; consult Minova CarboTech). When using products that have been stored for a longer period of time, it is generally recommended that Minova CarboTech GmbH checks whether the product specification is still provided before using this product. The legal storage regulations must be observed (see the safety data sheet).

Disposal

In Germany, completely emptied canisters are accepted free of charge by the acceptance points of the KBS system (Kreislaufsystem Blechverpackungen Stahl, more information about addresses can be obtained from Minova CarboTech). To empty the container completely, hit a corner of the upper bottom with a pointed object (e.g. a screwdriver) after using up the contents of the container. Place the canister on the corner and let it drain until nothing drips out.
We recommend that larger quantities of cured CarboLith PL be disposed of in a manner similar to household waste (EU Waste Code No. 20 01 39) after consultation with the disposal company.

Existing certificates and opinions

1. General technical approval Z-42.3-383 (DIBt, 2015)
2. Test report from a short liner test (PA 0529, IKT Gelsenkirchen, 2005)
3. Site report concerning the CarboLith Spot Repair System (P 00529, IKT Gelsenkirchen, 2005)
4. Drinking water and groundwater hygiene testing (Hygiene-Institut, Gelsenkirchen, 2005)
5. Material tests on a liner for partial renovation (Report 00.04905 S Ing.Büro Siebert, 2000)
6. Flushing test based on the Hamburg flushing test (Report 02.057598 S Ingenieurbüro Siebert, 2002)
7. Flexural strength, chem. suitability (Report 02.08394 S, Ingenieurbüro Siebert, 2002)
8. Tear test for assessment of adhesion strength (Report 03.09773 S Ingenieurbüro Siebert, 2003)
9. Chemical resistance of CarboLith PL/Advantex composite (Minova CarboTech GmbH, 2005)

The information in this data sheet is based on our knowledge and experience at the time of printing, which is given below. The level of knowledge and experience is constantly evolving. Therefore, please make sure that you always use the current version of this document.
The description of the use of the product in this data sheet cannot take into account special conditions and circumstances which may arise in individual cases. Therefore, please check our product in any case before use for its suitability for the specific purpose. Application, use and processing of our product take place naturally, beyond our control. You are therefore solely responsible for them as well as for the processing result achieved on the basis of our technical application information.
Nothing contained in this leaflet constitutes a warranty in the legal sense. It is clarified that we are only liable within the framework of the contractual agreements for the purchase of the product.
900401/100302/900401/CarboLith PL#d31 of January 2016

Disclaimer

Orica
1 Nicholson Street
Melbourne, VIC 3000

Manufacturer

Minova CarboTech GmbH
Am Technologiepark 1
45307 Essen
Phone +49 (0)201/8 09 83-500
Fax +49 (0)201/8 09 83-9500